Mathematics and Computation, Supercomputing, Reactor Physics and Nuclear and Biological Applications
Palais des Papes, Avignon, France, September 12-15, 2005, on CD-ROM, American Nuclear Society, LaGrange Park, IL (2005)

CFD SIMULATION OF A RESEARCH REACTOR

Yizhou Yan and Rizwan-uddin
Department of Nuclear, Plasma and Radiological Engineering
University of Illinois at Urbana-Champaign
103 S. Goodwin Ave, Urbana, IL, USA, 61801
yyan@uiuc.edu; rizwan@uiuc.edu

Nahil Sobh
National Center for Supercomputing Applications
University of Illinois at Urbana-Champaign
605 E. Springfield Avenue Champaign, IL, USA, 61820
sobh@ncsa.uiuc.edu

ABSTRACT

Fluent is used to simulate natural circulation condition in a research reactor design. Design optimization studies are also carried out. Design of the Replacement Research Reactor is chosen for this study. A simplified model consisting of the core, the chimney and the pool is simulated. The core in the integral model is represented by porous media. Parameters for the porous media model are obtained from complete CFD analyses of single fuel assembly. Chimney cross-sectional area is varied to optimize its design to increase the flow trough the core under natural circulation conditions. Results demonstrate that such studies can be carried out for research and test reactor design analyses.

KEYWORDS: Research Reactor, Thermal Hydraulics, CFD, Fluent

1. INTRODUCTION

Department of Nuclear, Plasma and Radiological Engineering at the University of Illinois is developing, testing and exploring the modeling and simulation tools that will assist in the design of a next generation research and test reactor. These simulation tools are also being used to assess design features desirable in a new reactor. Current focus is on neutronics and thermal hydraulics. Naturally, CFD and high performance computing (HPC) are being explored as a design and analysis option for the thermal hydraulics analysis of any proposed design. Nuclear industry has started taking advantage of CFD [2-7] to solve the problems that can be solved using the current state of CFD and computing power. CFD simulation of entire nuclear power plants, or even the entire core, still requires computing power not commonly available. Work has been reported on combining capabilities of large scale system codes like RELAP and CFD [8]. Recent developments in parallel cluster computing now allow nuclear engineers to solve problems of moderate to relatively high difficulty on these not-so-expensive clusters. However, modest computing facilities may allow CFD simulations of integral effects in smaller sized research and training reactors. Due to its unique features, the Australian Replacement Research

Reactor (RRR) was chosen to test applicability and feasibility of CFD and HPC to research reactor analysis.

Replacement Research Reactor (RRR) is a multi-purpose open-pool reactor. The cooling system of RRR, including passive heat removal mechanism, has some unique characteristics. The cooling system is composed of reactor pool, submerged coolant flow channel, coolant pumps, and service pool which cleans the coolant before it is pumped back to the reactor pool. The cooling system operates under forced circulation or natural circulation. Figure 1a is the front view of the RRR reactor pool [1].

The 20 MWth reactor core is submerged under approximately 13 meters of water. Coolant is forced to circulate and remove the heat from the reactor core. During normal working conditions, 90% of the coolant pump flow rate goes upward through the reactor core for cooling purpose, while remaining 10% goes downward through the upper chimney to keep the upper part of reactor pool free of radioactive material.

In a blackout accident, residual heat is expected to be carried away by natural circulation. After reactor shutdown, the control valves are switched to allow the establishment of natural circulation in the reactor pool, the core flow channels, and the chimney above the reactor core. The flow in the chimney goes upward in the natural circulation situation, which is opposite of the flow direction under normal operating conditions.

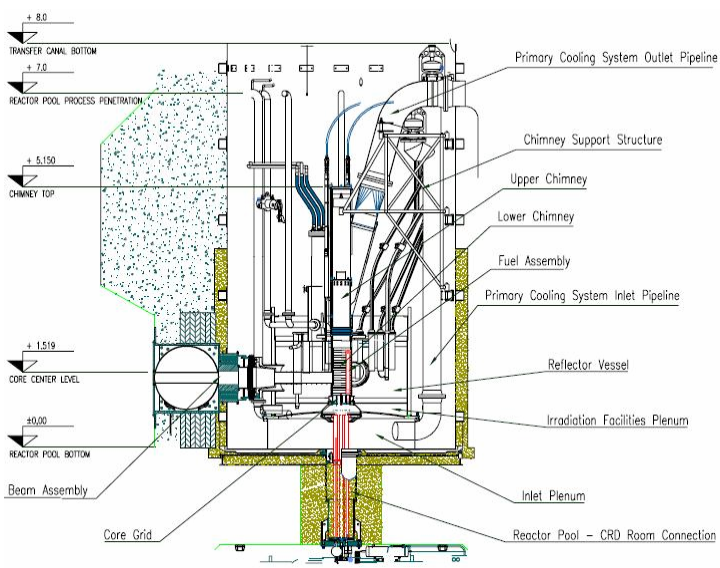

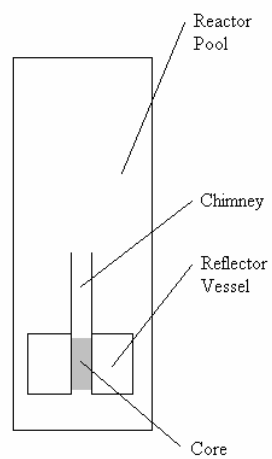

Figure 1a. Front view of RRR [1]

Figure 1b. Diagram of core, chimney and pool

Here, CFD is used to simulate natural circulation in RRR. CFD simulation of the complete system under forced or natural circulation conditions is prohibitive. We have carried out three-dimensional CFD studies of a simplified model that includes the core, the chimney and the pool. We have specifically studied the ability of natural circulation to remove residual heat.

2. MODEL AND SIMULATION

We used commercial CFD code Fluent 6. Gambit 2.1 is used to create the geometry, and to generate the meshes. Simulations were carried out on an IBM pSeries-690 machine and Tungsten, a Linux cluster at the National Center for Supercomputing Applications (NCSA) at the University of Illinois at Urbana-Champaign [9]. Though there are many more processors available, these simulations were carried out on only 4-16 processors. Fluent 6 is a widely used CFD code, which solves Navier-Stockes equations with finite volume method. Natural circulation in the RRR is simulated using the Boussinesq approximation. k-ε model with enhanced wall treatment model to describe near-wall behavior was chosen for turbulence.

2.1. Model and Mesh

The simplified model of the RRR used for CFD simulation is composed of the reactor core, the chimney, the heavy water reflector vessel and the reactor pool. A 2D schematic diagram is shown in Figure 1b. More detailed 3D, Fluent models are shown in Figures 2a and 2b.

RRR core has a total of 16 fuel assemblies arranged in a 4×4 grid. A RRR assembly has 21 fuel plates with thickness of 1.5 mm, width of 65 mm, and height of 615 mm. Water flows through the 22 narrow flow channels 2.54 mm thick, 75 mm wide, and 1000 mm long. There are total of 336 fuel plates (1.5 mm$\times$65 mm) and 352 (2.54 mm$\times$75 mm) rectangular coolant flow channels. Average velocity through the core under normal operating conditions (downward forced flow) is 8.2 m/s. Due to the extreme aspect ratio of the flow channels, a large number of cells are needed to model the reactor core. Hence, it was decided to model the core using a porous media approximation.

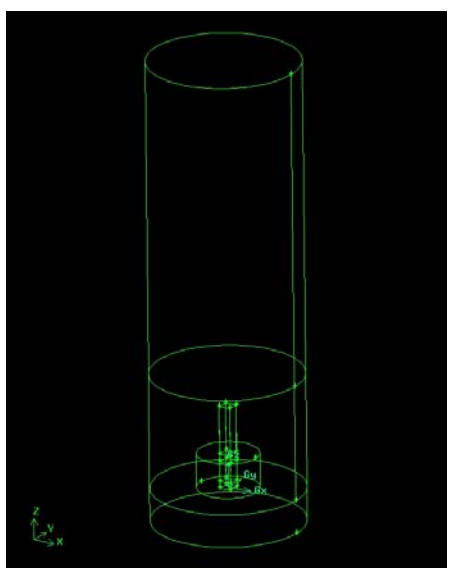

Figure 2a. Full scale CFD model of RRR

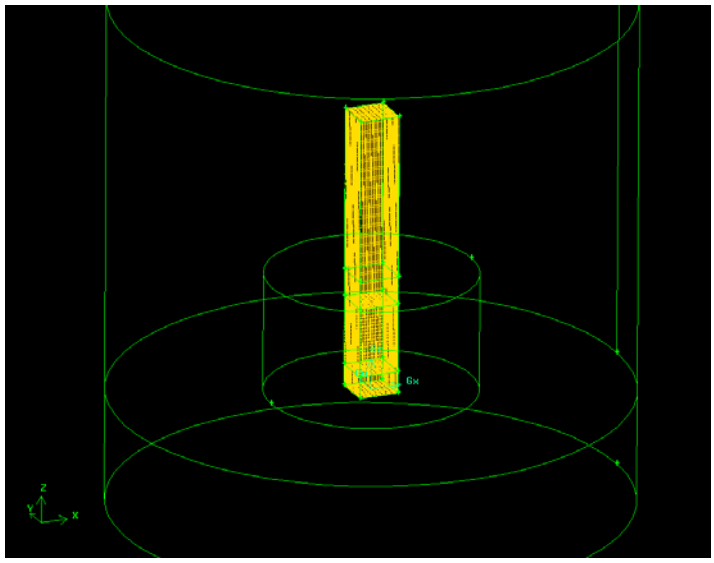

Figure 2b. CFD model of core and chimney.

By modeling the core as porous media, the mesh requirement is reduced dramatically.

2.2. Porous Media Model

Porous media in Fluent 6 is modeled using additional source terms in the momentum equation given by [10]

$$S_i = -\left(\sum_{j=1}^{3} D_{ij} \mu v_j + \sum_{j=1}^{3} C_{ij} \frac{1}{2} \rho v_{mag} v_j \right) \tag{1}$$

where S_i is the source term for the i th (x, y or z) momentum equation, v_j is the velocity component in j th (x, y or z) direction, v_{mag} is the velocity magnitude, and μ is the fluid viscosity. The first term on the right hand side of Eq. 1 is the viscous pressure loss term (Darcy term) due to the porous media structure. The second term (Forchheimer term) represents the pressure loss due to the momentum of the flow in the porous media zone. The parameter tensor D_{ij}, called viscous resistance factor, and C_{ij}, called inertial resistance factor, are defined by the users. The inertial resistance factor and the viscous resistance factor used in this work are estimated from the results of a set of fuel assembly level CFD simulations.

Porous media induced turbulence is not considered in the porous media model of this simulation. This simplification may lead to lower turbulent kinetic energy and turbulent viscosity, since turbulent kinetic energy equation of standard k-ε model does not include the term corresponding to porous media induced turbulence. Hence, the results obtained here may give a higher circulation flow rate.

2.2.1 Assembly level CFD

Figure 3 shows the there-dimensional CFD model of a fuel assembly. Due to the extreme aspect ratio and length-to-width ratio of the coolant channels, the assembly is meshed using 2.2 million cells.

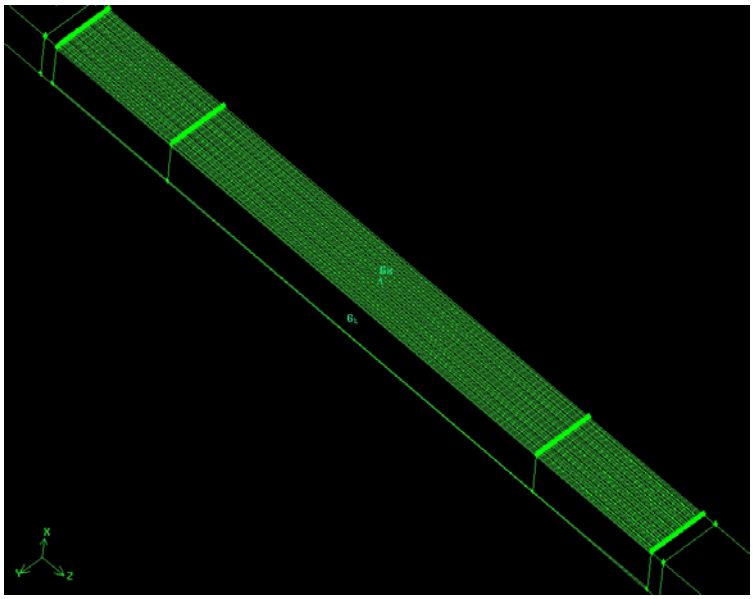

Figure 3. model of a fuel assembly

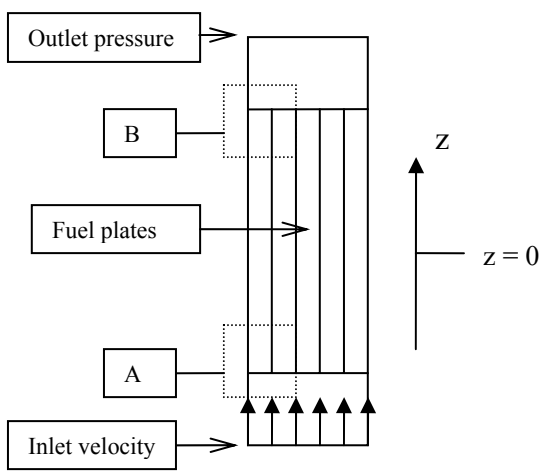

Figure 4. Boundary conditions on the fuel assembly

The goal of these assembly level simulations is to determine pressure drops for different inlet flow rates, and then estimate porous media parameters that would lead to the same pressure drop that would occur if the assembly was modeled using the porous media approximation. Figure 4 schematically shows the boundary conditions specified for the assembly-level simulations. The inlet velocity in CFD simulation is different from the average velocity v_{mag} used in Eq. 1

because v_{mag} is the average velocity in the core region where the flow area is smaller than that at the inlet.

In the assembly level simulation, the local pressure drops at the entrance (Zone A in Figure 4) and the exit (Zone B in Figure 4) of the flow channels are of interest. The velocity vectors at both, channel entrance and exit regions of the channel are plotted in Figures 5 and 6. Flow characteristics agree with expectations.

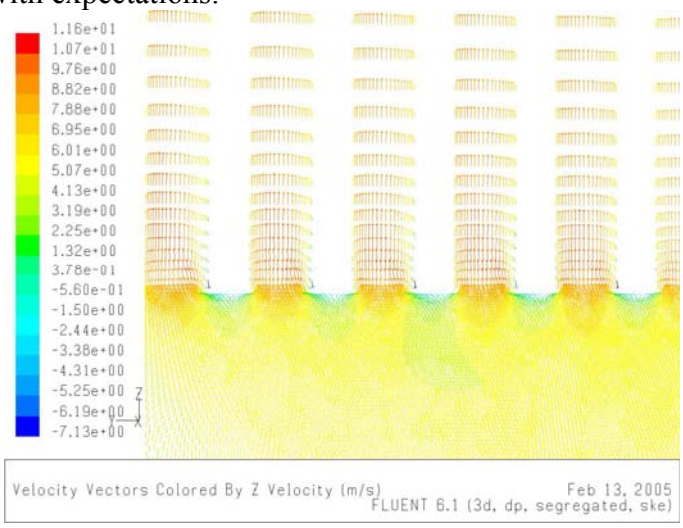

Figure 5. Velocity vector plot at assembly inlet (Box A in Figure 4)

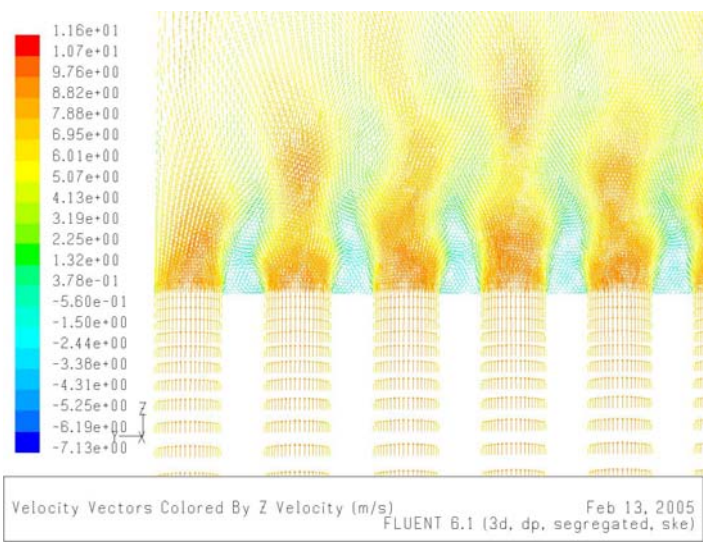

Figure 6. Velocity vector plot at assembly outlet (Box B in Figure 4)

Figure 7 shows the pressure along the flow direction in the assembly. It shows that a significant fraction of the pressure drop occurs at the channel's entrance (Zone A in Figure 4) and exit regions (Zone B in Figure 4). However, fraction of pressure drop that occurs along the assembly is higher that those normally seen in pipe flow (clean flow).

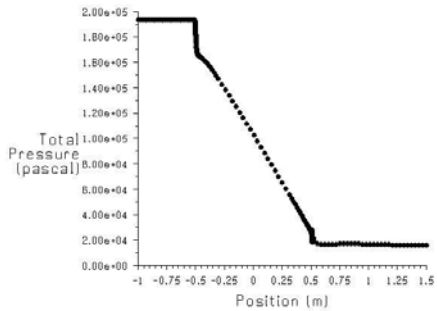

Figure 7. Pressure drop plot along an assembly

Under normal operating conditions, the core is cooled with forced circulation. The average velocity in coolant channels is 8.2 m/s which corresponds to 5.08 m/s of inlet velocity at the inlet of the "lower plenum" (see Figure 4). The pressure drop under normal operating condition is reported to be 240 kPa [1]. Corresponding CFD simulations show a pressure drop of only 180 kPa. The difference of 60 kPa is most likely due to local pressure drops because of other core structures which are not included in the assembly level CFD model. Mesh refinement exercise was carried out, and number of cells was increased from 2.2 million to 2.9 million. Similar pressure profiles were obtained in both cases, indicating that 2.2 million cells were sufficient to obtain stable and accurate results for the flow.

The total pressure drops corresponding to different inlet velocity conditions are listed in column 2 of Table I. Column 3 is the pressure drop of an assembly flow channel without fuel planes. The difference (column4) between the pressure drop in column 2 and column 3 are pressure drops from reactor core structures. Since we use porous media to model the core structure details, column 4 is the corresponding pressure drop to porous media source term. The parameters C_z and D_z in the porous media model are determined by curve fitting the pressure drop in column4.

Table I. Core pressure drop results from assemble level simulation and parameters C_z and D_z obtained for porous media model

Inlet velocity (m/s)	Pressure Drop of Assembly CFD with Structure Details (Pa)	Pressure Drop of A Channel without Fuel Planes (Pa)	Pressure Drop from Porous Source Term (Pa)	Inertial Resistance Factor C_z (1/m)	Viscous Resistance Factor D_z (1/m^2)
0.01	131.7	0.062	131.6	119.3	1.25E+07
0.025	349.1	0.20	348.89		
0.05	773.3	0.50	772.84		
0.1	1650.3	15.03	1635.23	8.58	1.37E+07
0.5	6188.5	34.39	6154.11		
1.0	14819.0	118.12	14700.88		
2.0	45279.9	412.80	44867.08		
5.08	180980.8	2259.98	178720.86		

In Table I, C_z and D_z are determined for laminar flow region and turbulent flow region, which are defined by the inlet velocity range of 0~0.1m/s and 0.1~5.08 m/s respectively. In porous media structure, the laminar flow converts into turbulent flow as inlet velocity is faster than 0.1 m/s. Experiment observation has detected that flow becomes unstable and chaotic as porous media Reynolds numbers, which based on porous characteristic length and average velocity in porous media, is higher than 300 to 1000 [11]. The porous media Reynolds number is 819 when inlet velocity is 0.01m/s.

For inlet velocity ranging from 0.01-5.08 m/s, a quadratic function is used to fit the pressure drop data as the 'ploy' curve shown in Figure 8. From whole set of data, average parameters for porous media model, $D_z = 1.59 \times 10^7$ 1/m^2 and $C_z = 8.8$ 1/m were found to be the viscous resistance factor and the inertial resistance factor for the porous media model in the flow direction. Because the flow region in full-scale nature circulation can't be determined, the average C_z and D_z will be used in integral simulation.

Using D_z and C_z obtained from whole set of pressure drop data, the flow in the assembly, this time was simulated with porous media approximation. Pressure drops from different CFD models for different inlet velocities are listed in Table II.

Table II. Core pressure drop results comparison

Inlet velocity (m/s)	Pressure Drop of Assembly CFD with Structure Details (Pa)	Pressure Drop of Assembly CFD with Porous Media* (Pa)	Pressure Drop of Assembly CFD with Porous Media** (Pa)
0.01	131.7	135.7	132.15
0.025	349.1	340.1	357.7
0.05	773.3	683.0	779.9
0.1	1650.3	1388	1422
0.5	6188.5	7844	7983
1.0	14819.0	17953	16202
2.0	45279.9	44933	45170
5.08	180980.8	184438	187167

* using uniform C_z and D_z for the whole velocity range

** using C_z and D_z in Table I the for individual velocity

Figure 8 shows that the three set of CFD results agree well within the velocity range of natural circulation and forced circulation.

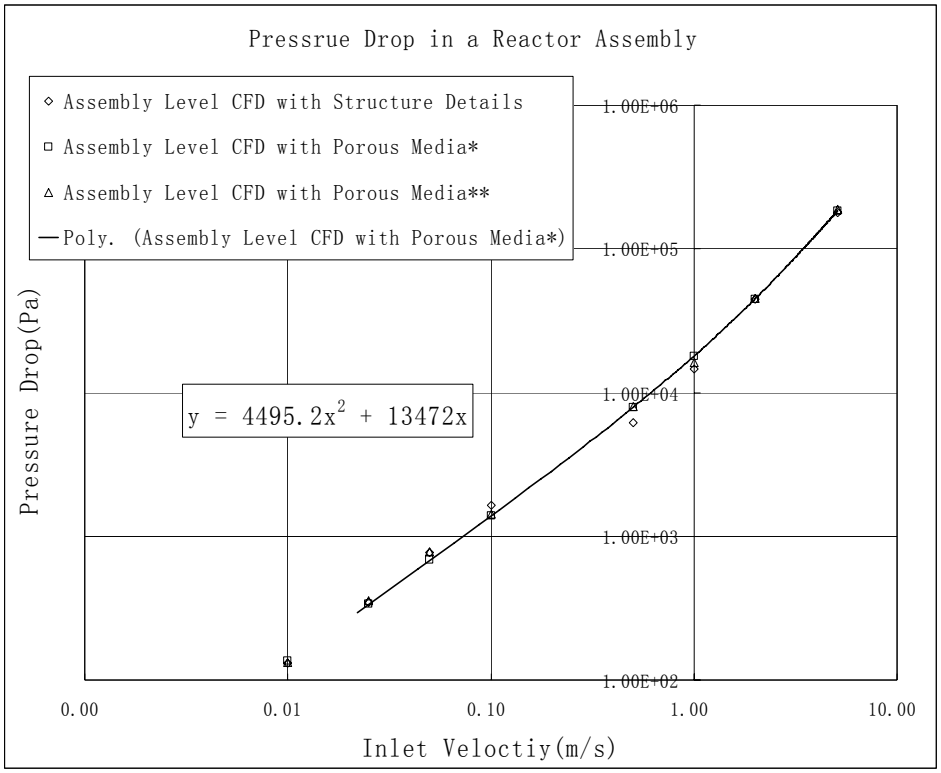

* using uniform C_z and D_z for the whole velocity range

** using C_z and D_z in Table I the for individual velocity

Figure 8. Curve fitting of pressure drop from assembly level CFD

2.2.2 Integral CFD

Using parameters D_z and C_z of the porous media model obtained from assembly level simulations, full scale RRR simulations were carried out that include the core (porous media), the chimney and the pool. Mesh for these simulations range from 400k-2.9M cells. Boundary condition at the top of the pool was set as wall (rigid lid). Temperature on all outside surfaces is set to be 308 K. In natural circulation simulations, with a "constant" residual heat of 1 MW (5% of full thermal power) added to porous media zone as a uniform thermal source term of 14 MW/m^3, the temperature rise across the core under natural circulation conditions is found to be around 43 K. Average velocity in the core is around 0.0418 m/s. A typical flow pattern established under natural flow is showed in Figure 11. Even if the flow through the core is cover estimated due to the nonconservative approximation of ignoring porous media induced turbulence, a 10~20% reduction in flow rate is not likely to increase the temperature rise to unacceptable level.

Highest velocity is located above the chimney outlet. It is due to the temperature difference between coolant from the chimney and water in the reactor pool. The buoyancy due to the temperature difference keeps accelerating the jet flow in the chimney.

Inner circulation is formed in the RRR chimney during natural circulation. Coolant above the chimney exit flows downward due to the higher density. This reverse flow builds up the inner circulation as shown in Figure 9.

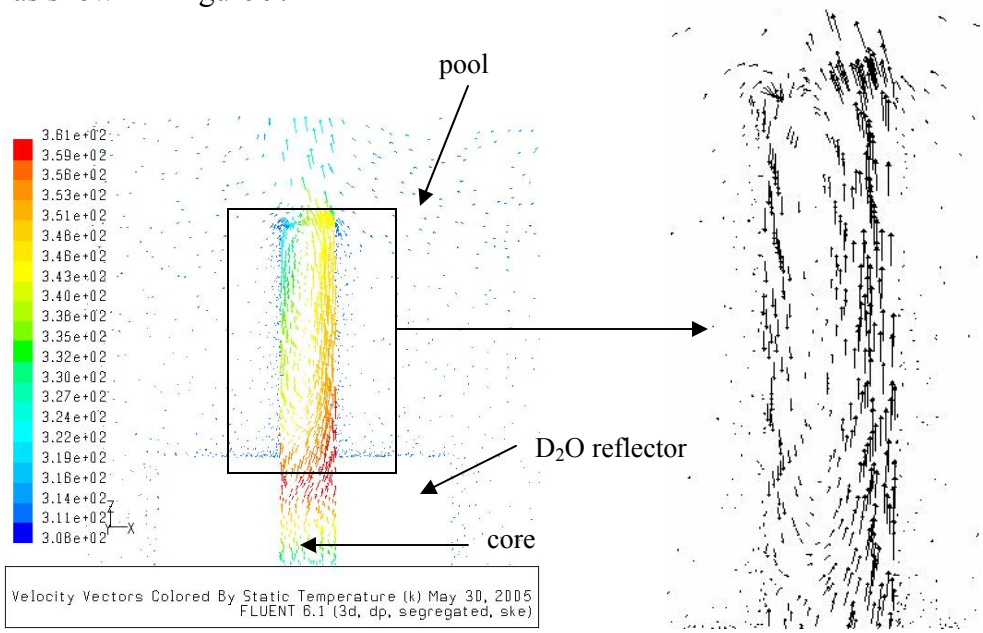

(a) (b)

Figure 9. Inner circulation in the chimney

2.3. Parametric Study

The effect of the chimney cross-sectional area on RRR natural circulation was studied parametrically. A system with chimney side length that is 80% of the design value (0.35 m×0.35 m) was modeled and simulated. All other model characteristics and dimensions were kept as in the simulation of the original RRR design.

The model with smaller chimney dimension showed no inner circulation in the chimney. Mass flow rate through the reactor core, temperature rise across the core, and average velocity in chimney for the two cases are compared in Table III. The comparison shows that the chimney with smaller cross-sectional area leads to a better residual heat removing ability. With smaller cross-sectional area, average velocity of the flow in the chimney is higher, and the inner circulation observed in the original design simulation was not observed.

Table III. Natural circulation conditions for two different chimney sizes

Chimney Cross-sectional Area (m^2)	Coolant flow rate thought core (kg/s)	Temperature rise across core (K)	Average velocity in chimney (m/s)
0.1225	5.11	49	0.0418
0.0784	5.26	46	0.0672

From the parametric study, we may conclude that, as expected, the inner circulation impairs the RRR full scale natural circulation. Any new research reactor design should be configured to avoid the occurrence of inner circulation in the chimney.

3. CONCLUSIONS

Full scale simulations of Replacement Research Reactor were carried out with the porous media model for reactor core. Parameters for the porous media were estimated from CFD simulations of flow in a single assembly. These simulations demonstrate that CFD analysis of research reactor can be carried out using the computational power currently available. Thus, further optimization of RRR and other research reactors' thermal hydraulic system design could be carried out with the help of CFD analysis.

ACKNOWLEDGMENTS

This work was supported in part by an INIE grant from the DOE.

REFERENCES

1. ANSTO, "Summary of the Preliminary Safety Analysis Report (PSAR) for the ANSTO Replacement Research Reactor Facility", www.ansto.gov.au (2001).
2. *Proceedings of the Technical Meeting on Use of Computational Fluid Dynamics (CFD Codes) for Safety Analysis of Reactor Systems Including Containment*, Pisa, November 11-14, (2002).
3. G. Yadigaroglu, M. Andreani, J. Dreier, and P. Coddington, "Trends and Needs in Experimentation and Numerical Simulation for LWR Safety," *Nucl. Eng. Des.*, **221**, 205–223 (2003).
4. G. Yadigaroglu, "Computational Fluid Dynamics for Nuclear Applications: from CFD to Multi-Scale CMFD", *Nucl. Eng. Des.*, **235**, 153–164 (2005).
5. H. Anglart, O. Nylund, N. Kurul, M. Z. Padowski, "CFD Prediction of Flow and Phase Distribution in Fuel Assemblies with Spacers", *Nucl. Eng. Des.*, **177**, 215-228 (1997).
6. T. S. Kwon, C. R. Choi, C. H. Song, "Three-Dimensional Analysis of Flow Characteristics on the Reactor Vessel Downcomer during the Late Reflood Phase of a Postulated LBLOCA", *Nucl. Eng. Des.*, **226**, 255–265 (2003).
7. Rizwan-uddin, Y. Yan, "CFD, Clusters and Nuclear Engineering", *Proceeding of 2004 ANS Winter Meeting*, Washington, DC, November 14-18 (2004).
8. Fluent Inc, "Fluent / RELAP5-3D © Integration Enters Validation Stage", http://www.fluent.com/about/news/newsletters/02v11i2/a31.htm (2002)
9. National Center for Supercomputing Application, (NCSA) of University of Illinois at Urbana-Champaign, www.ncsa.uiuc.edu
10. Fluent Inc, "Fluent User Manual 6.2", (2005)
11. B. V. Antohe, J. L. Lage, "A general two-equation macroscopic turbulence model for incompr essible flow in porous media", Int. J. Heat. Mass Transfer, **40**, 3012-3024 (1997)