Prashant K. Jain[1]
Suneet Singh
Rizwan-uddin

Department of Nuclear, Plasma and Radiological Engineering,
University of Illinois at Urbana–Champaign,
216 Talbot Lab,
104 South Wright Street,
Urbana, IL 61801

Analytical Solution to Transient Asymmetric Heat Conduction in a Multilayer Annulus

In this paper, we present an analytical double-series solution for the time-dependent asymmetric heat conduction in a multilayer annulus. In general, analytical solutions in multidimensional Cartesian or cylindrical (r,z) coordinates suffer from existence of imaginary eigenvalues and thus may lead to numerical difficulties in computing analytical solution. In contrast, the proposed analytical solution in polar coordinates (2D cylindrical) is "free" from such imaginary eigenvalues. Real eigenvalues are obtained by virtue of precluded explicit dependence of transverse (radial) eigenvalues on those in the other direction. [DOI: 10.1115/1.2977553]

Keywords: heat conduction, layered annulus, analytical method

1 Introduction

In modern engineering applications, multilayer components are extensively used due to the added advantage of combining physical, mechanical, and thermal properties of different materials. Many of these applications require a detailed knowledge of transient temperature and heat-flux distribution within the component layers. Both analytical and numerical techniques may be used to solve such problems. Nonetheless, numerical solutions are preferred and prevalent in practice, due to either unavailability or higher mathematical complexity of the corresponding exact solutions. Rather limited use of analytical solutions should not diminish their merit over numerical ones; since exact solutions, if available, provide an insight into the governing physics of the problem, which is typically missing in any numerical solution. Moreover, analyzing closed-form solutions to obtain optimal design options for any particular application of interest is relatively simpler. In addition, exact solutions find their applications in validating and comparing various numerical algorithms to help improve computational efficiency of computer codes that currently rely on numerical techniques.

Although multilayer heat conduction problems have been studied in great detail and various solution methods—including *orthogonal and quasiorthogonal expansion technique, Laplace transform method, Green's function approach, finite integral transform technique* [1–11]—are readily available; there is a continued need to develop and explore novel methods to solve problems for which exact solutions still do not exist. One such problem is to determine exact unsteady temperature distribution in polar coordinates (r,θ) with multiple layers in the radial direction.

Salt [12,13] addressed time-dependent heat conduction problem by orthogonal expansion technique, in a two-dimensional composite slab (Cartesian geometry) with no internal heat source, subjected to homogenous boundary conditions. Later, Mikhailov and Ozisik [14] solved the 3D transient conduction problem in a Cartesian nonhomogenous finite medium. More recently, Haji-Sheikh and Beck [15] applied Green's function approach to develop transient temperature solutions in a 3D Cartesian two-layer orthotropic medium including the effects of contact resistance. Lu et al. [5] developed a novel method by combining Laplace transform method and *separation of variables method* to solve multidimensional transient heat conduction problem in a rectangular and cylindrical multilayer slab with time-dependent periodic boundary condition. The treatment in the cylindrical coordinates is, however, restricted to the $r-z$ coordinates. *Eigenfunction expansion method* is applied by de Monte [16] to solve the unsteady heat conduction problem in a two-dimensional two-layer isotropic slab subjected to homogenous boundary conditions. Feng-Bin Yeh [17] applied the method of separation of variables to solve plasma heating of a one-dimensional two-layer composite slab with layers in imperfect thermal contact.

The brief review of relevant literature is by no means exhaustive. However, a literature survey showed that the analytical solution for unsteady temperature distribution in a multilayer annular geometry has not yet been developed. Recently, an exact solution based on the separation of variables method is developed by Singh et al. [18] for multilayer heat conduction in polar coordinates. However, that exact solution is applicable only to domains with pie slice geometry ($\phi<2\pi$, where ϕ is the angle subtended by the layers). Numerous applications involving multilayer cylindrical geometry require evaluation of temperature distribution in complete disk-type (i.e., $\phi=2\pi$) layers. One typical example is a nuclear fuel rod, which consists of concentric layers of different materials and often subjected to asymmetric boundary conditions. Moreover, several other applications including multilayer insulation materials, double heat-flux conductimeter, typical laser absorption calorimetry experiments, cryogenic systems, and other cylindrical building structures would benefit from such analytical solutions. This paper extends the solution approach developed by Singh et al. [18] for such applications and presents an analytical double-series solution for the time-dependent asymmetric heat conduction in a multilayer annulus. Solution is valid for any combinations of time-independent, inhomogeneous boundary conditions at the inner and outer radii of the domain. The results for an illustrative problem involving a three-layer annulus subjected to asymmetric heat-flux are also presented.

2 Mathematical Formulation

Consider an n-layer annulus $(r_0\leqslant r\leqslant r_n)$, as shown schematically in Fig. 1. All the layers are assumed to be isotropic in thermal properties and are in perfect thermal contact. Let k_i and α_i be the temperature independent thermal conductivity and thermal diffusivity of the ith layer. At $t=0$, each ith layer is at a specified temperature $f_i(r,\theta)$ and time-independent heat sources $g_i(r,\theta)$ are switched on for $t>0$. Both the inner $(i=1,\ r=r_0)$ as well as the

[1]Corresponding author.

Contributed by the Heat Transfer Division of ASME for publication in the Journal of Heat Transfer. Manuscript received February 12, 2008; final manuscript received April 21, 2008; published online October 20, 2008. Review conducted by Peter Vadasz.

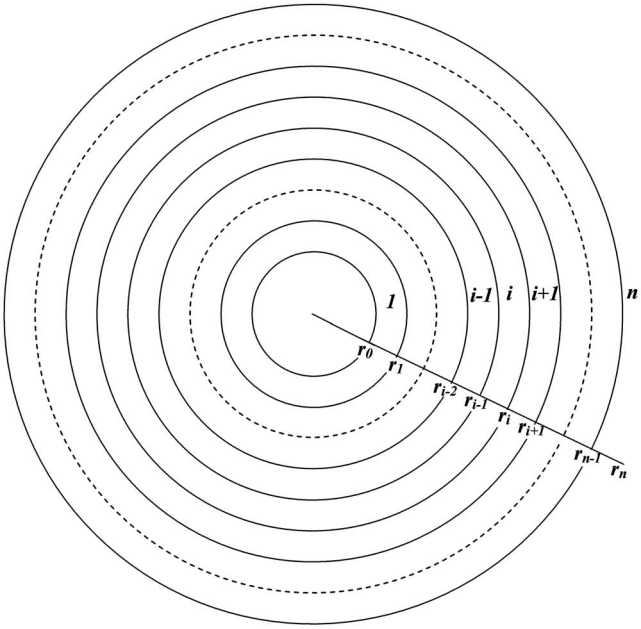

Fig. 1 Schematic of an *n*-layer annulus. *i*th layer has an inner and outer radii equal to r_{i-1} and r_i, respectively.

outer ($i=n$, $r=r_n$) surfaces of the annulus may be subjected to any combination of temperature and heat-flux boundary conditions. (Since perfect thermal contact between the adjacent layers is seldom observed in real materials, dealing with imperfect contact would require explicit modeling of the thermal resistance at the layer interfaces [11,17,19]. For such cases, the temperature at the contact interfaces will not be continuous.)

Under these assumptions, the governing heat conduction equation along with the boundary and initial conditions are as follows. Governing equation (for $r_{i-1} \leqslant r \leqslant r_i$, $0 \leqslant \theta \leqslant 2\pi$, and $t>0$, where $i=1,2,\ldots,n$):

$$\frac{1}{\alpha_i}\frac{\partial T_i}{\partial t}(r,\theta,t) = \frac{1}{r}\frac{\partial}{\partial r}\left(r\frac{\partial T_i}{\partial r}(r,\theta,t)\right) + \frac{1}{r^2}\frac{\partial^2 T_i}{\partial \theta^2}(r,\theta,t) + \frac{g_i(r,\theta)}{k_i} \tag{1}$$

Boundary conditions:

- Inner surface of the first layer (for $0 \leqslant \theta \leqslant 2\pi$ and $t>0$)

$$A_{\text{in}}\frac{\partial T_1}{\partial r}(r_0,\theta,t) + B_{\text{in}}T_1(r_0,\theta,t) = C_{\text{in}}(\theta) \tag{2}$$

- Outer surface of the nth layer (for $0 \leqslant \theta \leqslant 2\pi$ and $t>0$)

$$A_{\text{out}}\frac{\partial T_n}{\partial r}(r_n,\theta,t) + B_{\text{out}}T_n(r_n,\theta,t) = C_{\text{out}}(\theta) \tag{3}$$

- Periodic boundary conditions (for $r_{i-1} \leqslant r \leqslant r_i$ and $t>0$, where $i=1,2,\ldots,n$)

$$T_i(r,\theta=0,t) = T_i(r,\theta=2\pi,t) \tag{4}$$

$$\frac{\partial T_i}{\partial \theta}(r,\theta=0,t) = \frac{\partial T_i}{\partial \theta}(r,\theta=2\pi,t) \tag{5}$$

- Interface of the $(i-1)$st and the ith layer (for $0 \leqslant \theta \leqslant 2\pi$ and $t>0$, where $i=2,\ldots,n$)

$$T_i(r_{i-1},\theta,t) = T_{i-1}(r_{i-1},\theta,t) \tag{6}$$

$$k_i\frac{\partial T_i}{\partial r}(r_{i-1},\theta,t) = k_{i-1}\frac{\partial T_{i-1}}{\partial r}(r_{i-1},\theta,t) \tag{7}$$

Initial condition (for $r_{i-1} \leqslant r \leqslant r_i$ and $0 \leqslant \theta \leqslant 2\pi$, where $i=1,2,\ldots,n$):

$$T_i(r,\theta,t=0) = f_i(r,\theta) \tag{8}$$

Boundary conditions either of the first, second, or third kind may be imposed at $r=r_0$ and $r=r_n$ by choosing the appropriate coefficients in Eqs. (2) and (3). However, the case in which B_{in} and B_{out} are simultaneously zero is not considered. In addition, asymmetric boundary conditions can be applied by choosing θ-dependent C_{in} and C_{out}. Furthermore, multiple layers with zero inner radius ($r_0=0$) can be simulated by assigning zero values to constants B_{in} and C_{in} in Eq. (2). It should be noted that the formulation presented in this paper only applies toward time-independent boundary conditions and/or source terms due to the limitation of the separation of variables method. This solution methodology cannot be extended to include the effects of time-dependence in boundary conditions and/or sources. Such problems can be solved analytically using the finite integral transform technique [20,21].

3 Solution Methodology

In order to apply the separation of variables method, which is only applicable to homogenous problems, the nonhomogenous problem has to be split [21] into: (1) homogenous transient problem, and (2) nonhomogenous steady-state problem. This is accomplished by splitting $T_i(r,\theta,t)$ in the governing Eqs. (1)–(8) as $\bar{T}_i(r,\theta,t)+T_{\text{ss},i}(r,\theta)$, where $\bar{T}_i(r,\theta,t)$ is the "complementary" transient part and $T_{\text{ss},i}(r,\theta)$ is the steady-state part of the solution.

3.1 Homogenous Transient Problem. Homogenized complementary transient equations corresponding to Eqs. (1)–(8) are as follows.

Governing equation (for $r_{i-1} \leqslant r \leqslant r_i$, $0 \leqslant \theta \leqslant 2\pi$ and $t>0$, where $i=1,2,\ldots,n$):

$$\frac{1}{\alpha_i}\frac{\partial \bar{T}_i}{\partial t}(r,\theta,t) = \frac{1}{r}\frac{\partial}{\partial r}\left(r\frac{\partial \bar{T}_i}{\partial r}(r,\theta,t)\right) + \frac{1}{r^2}\frac{\partial^2 \bar{T}_i}{\partial \theta^2}(r,\theta,t) \tag{9}$$

Boundary conditions:

- Inner surface of the first layer (for $0 \leqslant \theta \leqslant 2\pi$ and $t>0$)

$$A_{\text{in}}\frac{\partial \bar{T}_1}{\partial r}(r_0,\theta,t) + B_{\text{in}}\bar{T}_1(r_0,\theta,t) = 0 \tag{10}$$

- Outer surface of the nth layer (for $0 \leqslant \theta \leqslant 2\pi$ and $t>0$)

$$A_{\text{out}}\frac{\partial \bar{T}_n}{\partial r}(r_n,\theta,t) + B_{\text{out}}\bar{T}_n(r_n,\theta,t) = 0 \tag{11}$$

- Periodic boundary conditions (for $r_{i-1} \leqslant r \leqslant r_i$ and $t>0$, where $i=1,2,\ldots,n$)

$$\bar{T}_i(r,\theta=0,t) = \bar{T}_i(r,\theta=2\pi,t) \tag{12}$$

$$\frac{\partial \bar{T}_i}{\partial \theta}(r,\theta=0,t) = \frac{\partial \bar{T}_i}{\partial \theta}(r,\theta=2\pi,t) \tag{13}$$

- Interface of the $(i-1)$st and the ith layer (for $0 \leqslant \theta \leqslant 2\pi$ and $t>0$ where $i=2,\ldots,n$)

$$\bar{T}_i(r_{i-1},\theta,t) = \bar{T}_{i-1}(r_{i-1},\theta,t) \tag{14}$$

$$k_i \frac{\partial \bar{T}_i}{\partial r}(r_{i-1},\theta,t) = k_{i-1}\frac{\partial \bar{T}_{i-1}}{\partial r}(r_{i-1},\theta,t) \tag{15}$$

Initial condition (for $r_{i-1} \leqslant r \leqslant r_i$ and $0 \leqslant \theta \leqslant 2\pi$, where $i = 1,2,\ldots,n$):

$$\bar{T}_i(r,\theta,t=0) = f_i(r,\theta) - T_{\mathrm{ss},i}(r,\theta) \tag{16}$$

3.2 Inhomogeneous Steady-State Problem. Inhomogeneous steady-state equations corresponding to Eqs. (1)–(8) are as follows. Governing equation (for $r_{i-1} \leqslant r \leqslant r_i$ and $0 \leqslant \theta \leqslant 2\pi$, where $i=1,2,\ldots,n$):

$$\frac{1}{r}\frac{\partial}{\partial r}\left(r\frac{\partial T_{\mathrm{ss},i}}{\partial r}(r,\theta)\right) + \frac{1}{r^2}\frac{\partial^2 T_{\mathrm{ss},i}}{\partial \theta^2}(r,\theta) + \frac{g_i(r,\theta)}{k_i} = 0,$$
$$r_{i-1} \leqslant r \leqslant r_i,\ 1 \leqslant i \leqslant n \tag{17}$$

Boundary conditions:

- Inner surface of the first layer (for $0 \leqslant \theta \leqslant 2\pi$)

$$A_{\mathrm{in}}\frac{\partial T_{\mathrm{ss},1}}{\partial r}(r_0,\theta) + B_{\mathrm{in}}T_{\mathrm{ss},1}(r_0,\theta) = C_{\mathrm{in}}(\theta) \tag{18}$$

- Outer surface of the nth layer (for $0 \leqslant \theta \leqslant 2\pi$)

$$A_{\mathrm{out}}\frac{\partial T_{\mathrm{ss},n}}{\partial r}(r_n,\theta) + B_{\mathrm{out}}T_{\mathrm{ss},n}(r_n,\theta) = C_{\mathrm{out}}(\theta) \tag{19}$$

- Periodic boundary conditions (for $r_{i-1} \leqslant r \leqslant r_i$, where $i = 1,2,\ldots,n$)

$$T_{\mathrm{ss},i}(r,\theta=0) = T_{\mathrm{ss},i}(r,\theta=2\pi) \tag{20}$$

$$\frac{\partial T_{\mathrm{ss},i}}{\partial \theta}(r,\theta=0) = \frac{\partial T_{\mathrm{ss},i}}{\partial \theta}(r,\theta=2\pi) \tag{21}$$

- Interface of the $(i-1)$st and the ith layer (for $0 \leqslant \theta \leqslant 2\pi$, where $i=2,\ldots,n$)

$$T_{\mathrm{ss},i}(r_{i-1},\theta) = T_{\mathrm{ss},i-1}(r_{i-1},\theta) \tag{22}$$

$$k_i\frac{\partial T_{\mathrm{ss},i}}{\partial r}(r_{i-1},\theta) = k_{i-1}\frac{\partial T_{\mathrm{ss},i-1}}{\partial r}(r_{i-1},\theta) \tag{23}$$

4 Solution to the Homogenous Transient Problem

4.1 Separation of Variables. Substituting the product form

$$\bar{T}_i(r,\theta,t) = R_i(r)\Theta(\theta)\Gamma_i(t) \tag{24}$$

in Eq. (9) and applying separation of variables yield the following ordinary differential equations (ODEs).

$$\frac{1}{r}\frac{d}{dr}\left(r\frac{dR_i(r)}{dr}\right) + \left(\lambda_i^2 - \frac{m^2}{r^2}\right)R_i(r) = 0 \quad \text{in } r_{i-1} \leqslant r \leqslant r_i,$$
$$\text{where } i = 1,2,\ldots,n \tag{25}$$

$$\frac{d^2\Theta(\theta)}{d\theta^2} + m^2\Theta(\theta) = 0 \quad \text{in } 0 \leqslant \theta \leqslant 2\pi \tag{26}$$

$$\frac{1}{\alpha_i}\frac{d\Gamma_i(t)}{dt} + \lambda_i^2\Gamma_i(t) = 0 \quad \text{for } t > 0, \quad \text{where } i = 1,2,\ldots,n \tag{27}$$

where λ_i^2 are constants of separation.

4.2 General Solution. In view of the ODEs listed above, a general solution for Eq. (9) may be realized as

$$\bar{T}_i(r,\theta,t) = \sum_{p=1}^{\infty} D_{0p}e^{-\alpha_i\lambda_{i0p}^2 t}R_{i0p}(\lambda_{i0p}r)$$
$$+ \sum_{m=1}^{\infty}\sum_{p=1}^{\infty} D_{\mathrm{mp}}e^{-\alpha_i\lambda_{\mathrm{imp}}^2 t}R_{\mathrm{imp}}(\lambda_{\mathrm{imp}}r)\cos(m\theta)$$
$$+ \sum_{m=1}^{\infty}\sum_{p=1}^{\infty} E_{\mathrm{mp}}e^{-\alpha_i\lambda_{\mathrm{imp}}^2 t}R_{\mathrm{imp}}(\lambda_{\mathrm{imp}}r)\sin(m\theta) \tag{28}$$

where continuity of the heat-flux at the layer interfaces requires the following relationship between the ith λ_{imp} and $\lambda_{1\mathrm{mp}}$ to hold [15,16,21,22],

$$\lambda_{\mathrm{imp}} = \lambda_{1\mathrm{mp}}\sqrt{\alpha_1/\alpha_i} \quad i = 1,2,\ldots,n \tag{29}$$

The radial (transverse) eigenfunction, $R_{\mathrm{imp}}(\lambda_{\mathrm{imp}}r)$ in Eq. (28) is

$$R_{\mathrm{imp}}(\lambda_{\mathrm{imp}}r) = a_{\mathrm{imp}}J_m(\lambda_{\mathrm{imp}}r) + b_{\mathrm{imp}}Y_m(\lambda_{\mathrm{imp}}r) \tag{30}$$

and the corresponding orthogonality condition is [18]

$$\sum_{i=1}^{n}\frac{k_i}{\alpha_i}\int_{r_{i-1}}^{r_i} rR_{\mathrm{imp}}(\lambda_{\mathrm{imp}}r)R_{\mathrm{imq}}(\lambda_{\mathrm{imq}}r)dr = \begin{bmatrix} 0 & \text{if } p \neq q \\ N_{\mathrm{rmp}} & \text{if } p = q \end{bmatrix} \tag{31}$$

where J_m and Y_m are Bessel functions of the first and second kind of order m, respectively. N_{rmp} is normalization integral in the r-direction.

For the angular eigenfunctions $\Theta_m(\theta)$—formed via combination of constant $\sin(m\theta)$ and $\cos(m\theta)$—the standard orthogonality condition is valid [21].

4.3 Radial (Transverse) Eigencondition. Application of the boundary conditions (Eqs. (10) and (11)) and interface conditions (Eqs. (14) and (15)) to the transverse eigenfunction $R_{\mathrm{imp}}(\lambda_{\mathrm{imp}}r)$ yields a $(2n \times 2n)$ matrix for each integer value of m. Transverse eigencondition is obtained by setting the determinant of this matrix equal to zero. Roots of which, in turn, yield the infinite number of eigenvalues $\lambda_{1\mathrm{mp}}$ corresponding to the first layer for each integer value of m.

4.4 Determination of Coefficients a_{imp} and b_{imp}. Coefficients a_{imp} and b_{imp} in the radial eigenfunction $R_{\mathrm{imp}}(\lambda_{\mathrm{imp}}r)$ (see Eq. (30)) are evaluated from the following recurrence relationship, obtained from the ith interface condition, valid for $i \in (1,n-1)$:

$$\begin{pmatrix} a_{i+1,\mathrm{mp}} \\ b_{i+1,\mathrm{mp}} \end{pmatrix} = \begin{pmatrix} J_m(\lambda_{i+1,\mathrm{mp}}r_i) & Y_m(\lambda_{i+1,\mathrm{mp}}r_i) \\ k_{i+1}J_m'(\lambda_{i+1,\mathrm{mp}}r_i) & k_{i+1}Y_m'(\lambda_{i+1,\mathrm{mp}}r_i) \end{pmatrix}^{-1}$$
$$\times \begin{pmatrix} J_m(\lambda_{\mathrm{imp}}r_i) & Y_m(\lambda_{\mathrm{imp}}r_i) \\ k_iJ_m'(\lambda_{\mathrm{imp}}r_i) & k_iY_m'(\lambda_{\mathrm{imp}}r_i) \end{pmatrix}\begin{pmatrix} a_{\mathrm{imp}} \\ b_{\mathrm{imp}} \end{pmatrix} \tag{32}$$

where $b_{1\mathrm{mp}} = -(C_{1\mathrm{in}}/C_{2\mathrm{in}})a_{1\mathrm{mp}}$, and $a_{1\mathrm{mp}}$ is arbitrary.

4.5 Determination of Coefficients D_{0p}, D_{mp}, and E_{mp}. Coefficients D_{0p}, D_{mp}, and E_{mp} in Eq. (28) are evaluated by applying the initial condition (Eq. (16)) and then making use of the orthogonality conditions in the radial and angular directions, as follows

$$D_{0p} = \frac{1}{2\pi N_{r0p}}\sum_{i=1}^{n}\frac{k_i}{\alpha_i}\int_0^{2\pi}\int_{r_{i-1}}^{r_i} rR_{i0p}(\lambda_{i0p}r)\bar{T}_i(r,\theta,t=0)drd\theta \tag{33}$$

$$D_{\mathrm{mp}} = \frac{1}{\pi N_{\mathrm{rmp}}}\sum_{i=1}^{n}\frac{k_i}{\alpha_i}\int_0^{2\pi}\int_{r_{i-1}}^{r_i} rR_{\mathrm{imp}}(\lambda_{\mathrm{imp}}r)\cos(m\theta)$$
$$\times \bar{T}_i(r,\theta,t=0)drd\theta \tag{34}$$

$$E_{\mathrm{mp}} = \frac{1}{\pi N_{\mathrm{rmp}}} \sum_{i=1}^{n} \frac{k_i}{\alpha_i} \int_0^{2\pi} \int_{r_{i-1}}^{r_i} r R_{\mathrm{imp}}(\lambda_{\mathrm{imp}} r) \sin(m\theta) \bar{T}_i(r,\theta,t=0) dr d\theta \tag{35}$$

5 Absence of imaginary Radial Eigenvalues

In general, transverse eigenvalues for multilayer time-dependent heat conduction problems in Cartesian coordinates may be imaginary [16]. Same is true for 2D (r,z) cylindrical coordinates. The eigenvalues are imaginary due to the explicit dependence of the transverse eigenvalues on those in the remaining direction(s). For example, in a two-layer homogenous heat conduction problem with layers in the x-direction, the general solution in the ith layer is [15,16]

$$T_i(x,y,t) = \sum_{m=1}^{\infty} \sum_{p=1}^{\infty} Z_{\mathrm{mp}} e^{-\alpha_i(\nu_{\mathrm{imp}}^2 + \eta_m^2)t} X_{\mathrm{imp}}(\nu_{\mathrm{imp}} x) Y_m(\eta_m y) \tag{36}$$

where ν_{imp} and η_m are eigenvalues in the x- and y-directions, respectively; and X_{imp} $(\nu_{\mathrm{imp}} x)$ and $Y_m(\eta_m y)$ are the corresponding eigenfunctions.

For heat-flux to be continuous at the interface $\forall t$

$$\alpha_1(\nu_{1\mathrm{mp}}^2 + \eta_m^2) = \alpha_2(\nu_{2\mathrm{mp}}^2 + \eta_m^2) \tag{37}$$

which implies

$$\nu_{2\mathrm{mp}} = \sqrt{\frac{\alpha_1}{\alpha_2}\nu_{1\mathrm{mp}}^2 + \left(\frac{\alpha_1}{\alpha_2} - 1\right)\eta_m^2} \tag{38}$$

Clearly, the relationship above may result in either real or imaginary transverse eigenvalues [13,15,16].

However, in the present case, similar considerations led to Eq. (29), which is similar to what has been established for 1D multilayer time-dependent problems and eliminates the possibility of imaginary eigenvalues. Moreover, physical considerations dictate that eigenvalues should be real (both in the present and the corresponding 1D case) because imaginary eigenvalues will result in exponentially growing temperatures. In contrast, the solution given in Eq. (36) can have a physically realizable solution even in the case where eigenvalues in one of the directions are imaginary.

It should be noted that, though there is no explicit dependence between radial and angular eigenvalues, the order of the Bessel functions constituting radial eigenfunctions is determined by the angular eigenvalues. Hence, the radial eigenvalues *implicitly* depend on the angular eigenvalues. Moreover, unlike in Cartesian coordinates, this implicit dependence does not vanish even if $\alpha_1 = \alpha_i (i \neq 1)$. In fact, it exists even for single-layer problems.

6 Solution to the Inhomogeneous Steady-State Problem

The inhomogeneous steady-state problem is solved using the eigenfunction expansion method. The steady-state temperature distribution, governed by Eq. (17), may be written as a generalized Fourier series in terms of angular eigenfunctions,

$$T_{\mathrm{ss},i}(r,\theta) = \hat{T}_{i0}(r) + \sum_{m=1}^{\infty} \hat{T}_{c,\mathrm{im}}(r)\cos(m\theta) + \sum_{m=1}^{\infty} \hat{T}_{s,\mathrm{im}}(r)\sin(m\theta), \quad r_{i-1} \leq r \leq r_i, \quad 1 \leq i \leq n \tag{39}$$

Substituting Eq. (39) in Eq. (17) leads to the following ODEs:

$$\frac{1}{r}\frac{d}{dr}\left(r\frac{d\hat{T}_{c,\mathrm{im}}(r)}{dr}\right) - \frac{m^2}{r^2}\hat{T}_{c,\mathrm{im}}(r) + \frac{\hat{g}_{c,\mathrm{im}}(r)}{k_i} = 0 \tag{40}$$

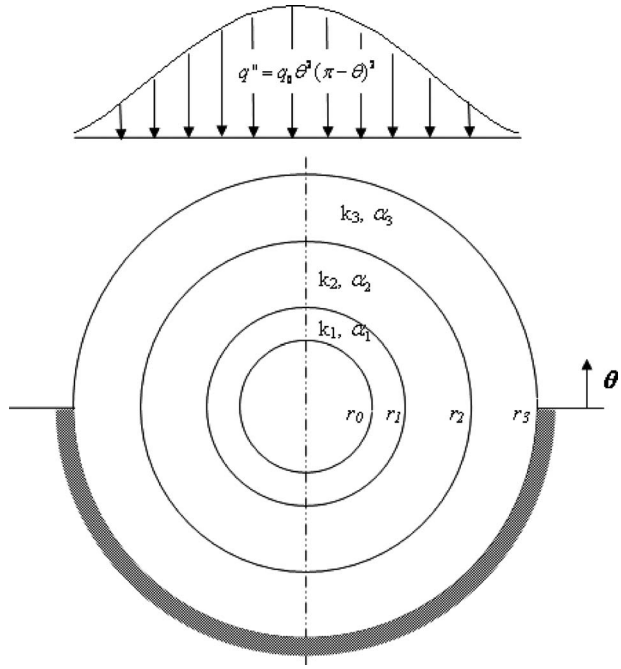

Fig. 2 Asymmetric heat conduction in a three-layer annulus. Each layer has a different thermal conductivity (k_i) and thermal diffusivity (α_i). The lower-half of the annulus ($\pi \leq \theta \leq 2\pi$) is kept insulated, while the upper-half ($0 \leq \theta \leq \pi$) is subjected to a θ-dependent *incoming* heat-flux.

$$\frac{1}{r}\frac{d}{dr}\left(r\frac{d\hat{T}_{s,\mathrm{im}}(r)}{dr}\right) - \frac{m^2}{r^2}\hat{T}_{s,\mathrm{im}}(r) + \frac{\hat{g}_{s,\mathrm{im}}(r)}{k_i} = 0 \tag{41}$$

$$\frac{1}{r}\frac{d}{dr}\left(r\frac{d\hat{T}_{i0}(r)}{dr}\right) + \frac{\hat{g}_{i0}(r)}{k_i} = 0 \tag{42}$$

where the source term $g_i(r,\theta)$ is expanded in a generalized Fourier series as

$$g_i(r,\theta) = \hat{g}_{i0}(r) + \sum_{m=1}^{\infty} \hat{g}_{c,\mathrm{im}}(r)\cos(m\theta) + \sum_{m=1}^{\infty} \hat{g}_{s,\mathrm{im}}(r)\sin(m\theta) \tag{43}$$

and

$$\hat{g}_{c,\mathrm{im}}(r) \equiv \frac{1}{\pi}\int_0^{2\pi} g_i(r,\theta)\cos(m\theta)d\theta \tag{44}$$

$$\hat{g}_{s,\mathrm{im}}(r) \equiv \frac{1}{\pi}\int_0^{2\pi} g_i(r,\theta)\sin(m\theta)d\theta \tag{45}$$

$$\hat{g}_{i0}(r) \equiv \frac{1}{2\pi}\int_0^{2\pi} g_i(r,\theta)d\theta \tag{46}$$

Similarly, $C_{\mathrm{in}}(\theta)$ and $C_{\mathrm{out}}(\theta)$ in Eqs. (18) and (19) may be expanded in a generalized Fourier series to yield boundary conditions for ODEs in Eqs. (40)–(42).

Solutions for the Euler equations, Eqs. (40) and (41) are given by

$$\hat{T}_{c,\mathrm{im}}(r) = A_{c,i}r^m + B_{c,i}r^{-m} + f_{\mathrm{pc}}(r) \tag{47}$$

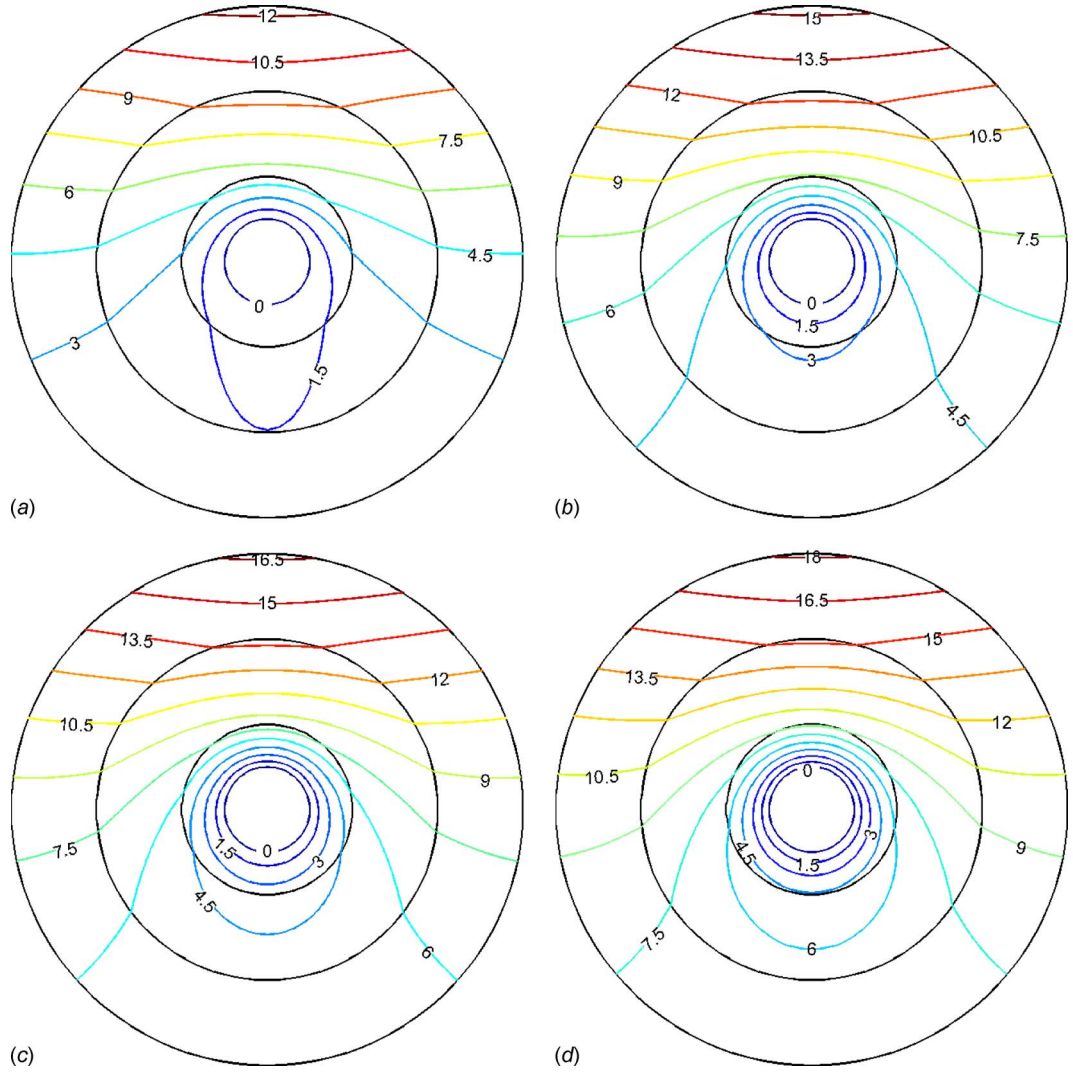

Fig. 3 Transient isotherms in three-layer annulus: (*a*) *t*=5, (*b*) *t*=10, (*c*) *t*=15, and (*d*) steady state

$$\hat{T}_{s,\mathrm{im}}(r) = A_{s,i}r^{m} + B_{s,i}r^{-m} + f_{\mathrm{ps}}(r) \tag{48}$$

where $f_{\mathrm{pc}}(r)$ and $f_{\mathrm{ps}}(r)$ are particular integrals, which can be evaluated by the application of method of variation of parameters or method of undetermined coefficients. The constants $A_{c,i}$, $A_{s,i}$, $B_{c,i}$, and $B_{s,i}$ may be evaluated using boundary and interface conditions for $\hat{T}_{c,\mathrm{im}}(r)$ and $\hat{T}_{s,\mathrm{im}}(r)$. Once $\hat{g}_{i0}(r)$ are evaluated, the solution for $\hat{T}_{i0}(r)$ is straightforward.

7 Illustrative Example and Results

A three-layer annulus ($r_0 \leqslant r \leqslant r_3$, $0 \leqslant \theta \leqslant 2\pi$; see Fig. 2) is initially at a uniform zero temperature. For time $t>0$, θ-dependent heat flux given by

$$q''(r=r_3,\theta) = \begin{bmatrix} q_0\theta^2(\pi-\theta)^2, & 0 \leqslant \theta \leqslant \pi \\ 0, & \pi \leqslant \theta \leqslant 2\pi \end{bmatrix} \tag{49}$$

is applied at the outer surface ($r=r_3$) while the inner surface ($r=r_0$) is maintained isothermal at zero temperature. This leads to the coefficients $A_{\mathrm{in}}=0$, $B_{\mathrm{in}}=1$, $A_{\mathrm{out}}=k_3$, $B_{\mathrm{out}}=0$, $C_{\mathrm{in}}(\theta)=0$, and $C_{\mathrm{out}}(\theta)=q''(r_3,\theta)$ in the respective boundary condition equations. There is no volumetric heat generation in any of the layers, i.e., $g_i(r,\theta)=0$.

Parameter values used in this problem are $k_2/k_1=2$, $k_3/k_1=4$, $\alpha_2/\alpha_1=4$, $\alpha_3/\alpha_1=9$, $r_1/r_0=2$, $r_2/r_0=4$, and $r_3/r_0=6$. These have been arbitrarily chosen and do not, in any way, simplify the solution.

It should be noted that, in the results that follow, r, t, and $T_i(r,\theta,t)$ are in the units of r_0, r_0^2/α_1, and, q_0r_0/k_1, respectively.

For this particular problem, the infinite series solution for the complementary transient temperature $\bar{T}_i(r,\theta,t)$ is truncated at $p=P$ and $m=M$ leading to

$$\begin{aligned}\bar{T}_i(r,\theta,t) = &\sum_{p=1}^{P} D_{0p}e^{-\alpha_i\lambda_{i0p}^2 t}R_{i0p}(\lambda_{i0p}r) \\ &+ \sum_{m=1}^{M}\sum_{p=1}^{P} D_{\mathrm{mp}}e^{-\alpha_i\lambda_{\mathrm{imp}}^2 t}R_{\mathrm{imp}}(\lambda_{\mathrm{imp}}r)\cos(m\theta) \\ &+ \sum_{m=1}^{M}\sum_{p=1}^{P} E_{\mathrm{mp}}e^{-\alpha_i\lambda_{\mathrm{imp}}^2 t}R_{\mathrm{imp}}(\lambda_{\mathrm{imp}}r)\sin(m\theta) \\ &- \varepsilon_i(r,\theta,t;M,P)\end{aligned} \tag{50}$$

where $\varepsilon_i(r,\theta,t;M,P)$ is the truncation error. Since $\lambda_{1\mathrm{mp}}$ increases with increasing m and p, it is obvious that for a given M and P,

maximum truncation error occurs at $t=0$. Moreover, since $\bar{T}_i(r,\theta,t=0)=-T_{ss,i}(r,\theta)$, therefore

$$\varepsilon_i(r,\theta,t=0;M,P)=T_{ss,i}(r,\theta)+\sum_{p=1}^{P}D_{0p}R_{i0p}(\lambda_{i0p}r)+\sum_{m=1}^{M}\sum_{p=1}^{P}D_{mp}R_{imp}(\lambda_{imp}r)\cos(m\theta)+\sum_{m=1}^{M}\sum_{p=1}^{P}E_{mp}R_{imp}(\lambda_{imp}r)\sin(m\theta) \quad (51)$$

However, $T_{ss,i}(r,\theta)$ is also evaluated as a series solution (see Eq. (39)) and hence, the above equation can be written as

$$\varepsilon_i(r,\theta,t=0;M,P)=\left(\hat{T}_{i0}(r)+\sum_{m=1}^{M_{ss}}\hat{T}_{c,im}(r)\cos(m\theta)+\sum_{m=1}^{M_{ss}}\hat{T}_{s,im}(r)\sin(m\theta)+\varepsilon_{ss,i}(r,\theta,M_{ss})\right)+\sum_{p=1}^{P}D_{0p}R_{i0p}(\lambda_{i0p}r)+\sum_{m=1}^{M}\sum_{p=1}^{P}D_{mp}R_{imp}(\lambda_{imp}r)\cos(m\theta)+\sum_{m=1}^{M}\sum_{p=1}^{P}E_{mp}R_{imp}(\lambda_{imp}r)\sin(m\theta) \quad (52)$$

A good estimate of $\varepsilon_i(r,\theta,t=0;M,P)$ may be obtained only if $\varepsilon_{ss,i}(r,\theta;M_{ss})\ll\varepsilon_i(r,\theta,t=0;M,P)$. The above requirement may be fulfilled by including, not surprisingly, a large number of terms in the steady-state series solution so as to minimize the steady-state truncation error. The maximum difference between the steady-state temperatures obtained with $M_{ss}=45$ and $M_{ss}=50$ is found to be of the order of 10^{-5}, therefore, this series is truncated at $M_{ss}=50$.

The maximum percent error defined as $\max(\varepsilon(r,\theta,t=0))/(T_{ss,\max}-T_{ss,\min})$ is evaluated for various values of M and P. For $M=P=6$, 8, and 10, the error is 2.25%, 1.69%, and 1.36%, respectively.

Isotherms in the three-layer annulus are shown for different t values in Fig. 3. At any time t, maximum and minimum temperatures are observed on the outer edge of the annulus ($r=r_3$) at angular locations $\theta=\pi/2$ and $3\pi/2$, respectively. Temperature kinks (or discontinuity in temperature slopes) are clearly visible in the isotherms indicating different thermal properties of the three layers. Additionally, radial temperature variations at distinct angular positions are shown in Fig. 4. At any given (r,t), maximum and minimum temperatures are observed at $\theta=\pi/2$ and $3\pi/2$, respectively, as expected, since the *incoming* heat-flux is symmetric in $0\leqslant\theta\leqslant\pi$ and has a maxima at $\theta=\pi/2$. The results shown in Figs. 3 and 4 are obtained with $M=P=10$.

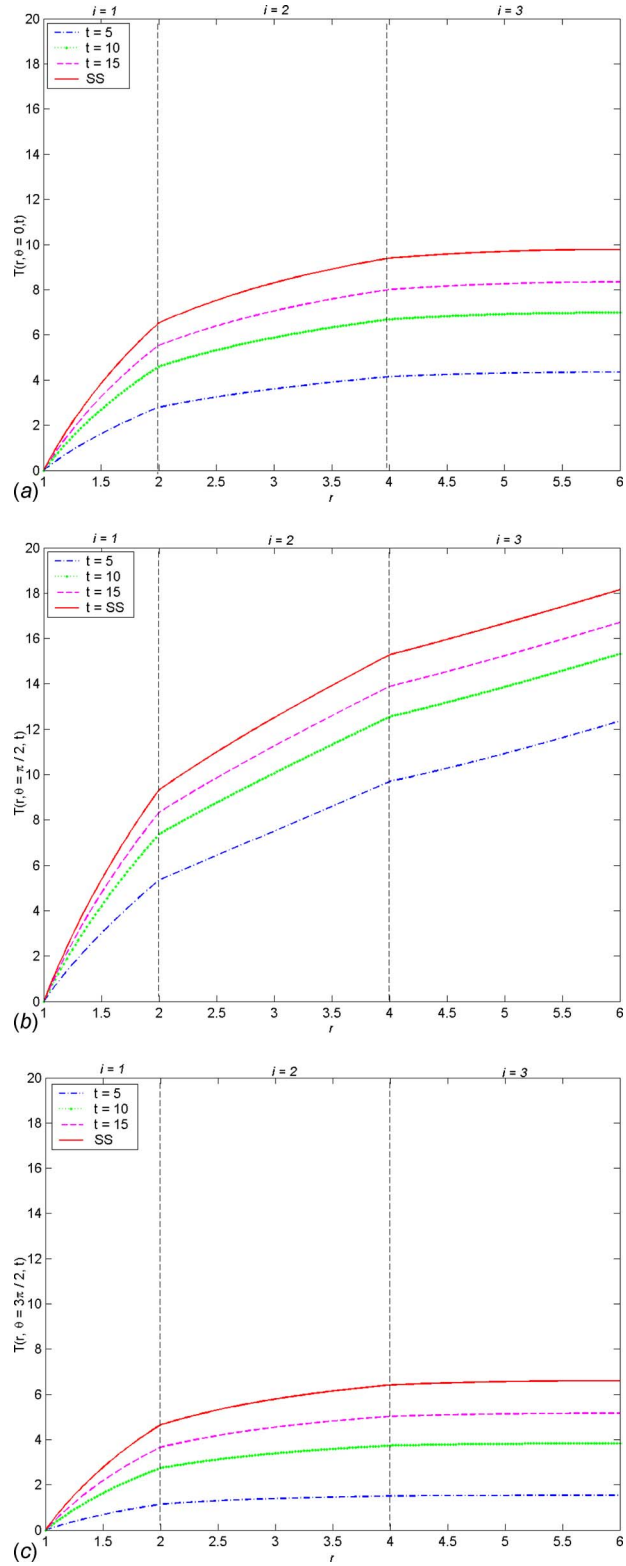

Fig. 4 Transient temperature variation in the radial direction at (*a*) $\theta=0$, (*b*) $\theta=\pi/2$, and (*c*) $\theta=3\pi/2$

8 Conclusions

In this paper, an analytical solution to the asymmetric transient heat conduction in a layered annulus is presented. Each layer can have spatially varying but time-independent volumetric heat source. Inhomogeneous boundary condition of the first, second, or the third kind can be applied in the radial direction. The proposed solution is also applicable to the layered-structures with inner radius $r_0=0$.

It is noted that the solution of the multilayer two-dimensional heat conduction problem in polar coordinates is not analogous to the corresponding problem in multidimensional Cartesian coordinates (or 2D cylindrical $r-z$ coordinates). In polar coordinates, dependence of the eigenvalues in the transverse direction on those in the other direction is not explicit. The absence of explicit dependence leads to a complete solution, which does not have imaginary transverse eigenvalues. Numerical evaluation of the

double-series solution shows that a reasonable number of terms are sufficient to obtain results with acceptable errors for engineering applications.

References

[1] Mulholland, G. P., and Cobble, M. H., 1972, "Diffusion Through Composite Media," Int. J. Heat Mass Transfer, **15**, pp. 147–160.

[2] Mikhailov, M. D., Ozisik, M. N., and Vulchanov, N. L., 1983, "Diffusion in Composite Layers With Automatic Solution of the Eigenvalue Problem," Int. J. Heat Mass Transfer, **26**(8), pp. 1131–1141.

[3] Desai, A., Geer, J., and Sammakia, B., 2006, "Models of Steady Heat Conduction in Multiple Cylindrical Domains," ASME J. Electron. Packag., **128**, pp. 10–17.

[4] Bulavin, P. E., and Kascheev, V. M., 1965, "Solution of the Non-Homogeneous Heat Conduction Equation for Multilayered Bodies," Int. Chem. Eng., **1**, pp. 112–115.

[5] Lu, X., Tervola, P., and Viljanen, M., 2006, "Transient Analytical Solution to Heat Conduction in Composite Circular Cylinder," Int. J. Heat Mass Transfer, **49**, pp. 341–348.

[6] Shupikov, A. N., Smetankina, N. V., and Svet, Y. V., 2007, "Nonstationary Heat Conduction in Complex-Shape Laminated Plates," ASME J. Heat Transfer, **129**, pp. 335–341.

[7] Geer, J., Desai, A., and Sammakia, B., 2007, "Heat Conduction in Multilayered Rectangular Domains," ASME J. Electron. Packag., **129**, pp. 440–451.

[8] Huang, S. C., and Chang, Y. P., 1980, "Heat Conduction in Unsteady, Periodic and Steady States in Laminated Composites," ASME J. Heat Transfer, **102**, pp. 742–748.

[9] Siegel, R., 1999, "Transient Thermal Analysis of Parallel Translucent Layers by Using Green's Functions," J. Thermophys. Heat Transfer, **13**(1), pp. 10–17.

[10] Haji-Sheikh, A., and Beck, J. V., 1990, "Green's Function Partitioning in Galerkin-Base Integral Solution of the Diffusion Equation," ASME J. Heat Transfer, **112**, pp. 28–34.

[11] Yener, Y., and Ozisik, M. N., 1974, "On the Solution of Unsteady Heat Conduction in Multi-Region Finite Media With Time-Dependent Heat Transfer Coefficient," *Proceedings of the Fifth International Heat Transfer Conference*, JSME, Tokyo, Japan, Sep. 3–7, pp. 188–192.

[12] Salt, H., 1983, "Transient Heat Conduction in a Two-Dimensional Composite Slab. I. Theoretical Development of Temperatures Modes," Int. J. Heat Mass Transfer, **26**(11), pp. 1611–1616.

[13] Salt, H., 1983, "Transient Heat Conduction in a Two-Dimensional Composite Slab. II. Physical Interpretation of Temperatures Modes," Int. J. Heat Mass Transfer, **26**(11), pp. 1617–1623.

[14] Mikhailov, M. D., and Ozisik, M. N., 1986, "Transient Conduction in a Three-Dimensional Composite Slab," Int. J. Heat Mass Transfer, **29**(2), pp. 340–342.

[15] Haji-Sheikh, A., and Beck, J. V., 2002, "Temperature Solution in Multi-Dimensional Multi-Layer Bodies," Int. J. Heat Mass Transfer, **45**(9), pp. 1865–1877.

[16] de Monte, F., 2003, "Unsteady heat Conduction in Two-Dimensional Two Slab-Shaped Regions. Exact Closed-Form Solution and Results," Int. J. Heat Mass Transfer, **46**(8), pp. 1455–1469.

[17] Yeh, F.-B., 2007, "Prediction of the Transient and Steady Temperature Distributions in a Two-Layer Composite Slab in Contact With a Plasma: Exact Closed-Form Solutions," J. Phys. D: Appl. Phys., **40**, pp. 3633–3643.

[18] Singh, S., Jain, P. K., and Rizwan-uddin, 2008, "Analytical Solution to Transient Heat Conduction in Polar Coordinates With Multiple Layers in Radial Direction," Int. J. Therm. Sci., **47**, pp. 261–273.

[19] Yuen, W. Y. D., 1994, "Transient Temperature Distribution in a Multilayer Medium Subject to Radiative Surface Cooling," Appl. Math. Model., **18**, pp. 93–100.

[20] Singh, S., Jain, P. K., and Rizwan-uddin, 2007, "Finite Integral Transform Technique to Solve Asymmetric Heat Conduction in a Multilayer Annulus With Time-Dependent Boundary Conditions," submitted.

[21] Ozisik, M. N., 1993, *Heat Conduction*, 2nd ed., Wiley and Sons, New York.

[22] de Monte, F., 2002, "An Analytic Approach to the Unsteady Heat Conduction Processes in One-Dimensional Composite Media," Int. J. Heat Mass Transfer, **45**(6), pp. 1333–1343.